UNLESS OTHERWISE NOTED: ALL MODS ARE IMPLEMENTED IN PRODUCTION - FIELD IMPLEMENTATION IS OPTIONAL.

MOD STATUS	REVISION RECORD				
	REV	CHANGE	BY	DATE	APP.
C	3	DELETED D13 FROM S18.	JAV	06/04/2008	MGH

MOD STATUS	REVISION RECORD				
	REV	CHANGE	BY	DATE	APP.
A	0	FIRST ISSUE.	JAV	05/08/90	RL
B	1	C1-4 WERE 60MF,50V;CHANGED MOD STATUS TO B PER 12702.	JAP	07/24/97	EJO
C	2	CHANGED MOD STATUS TO C INCORPORATING SPRING LOADED MIC SELECT PUSH BUTTONS, PER ECO 12536.	JAP	07/24/97	JAS

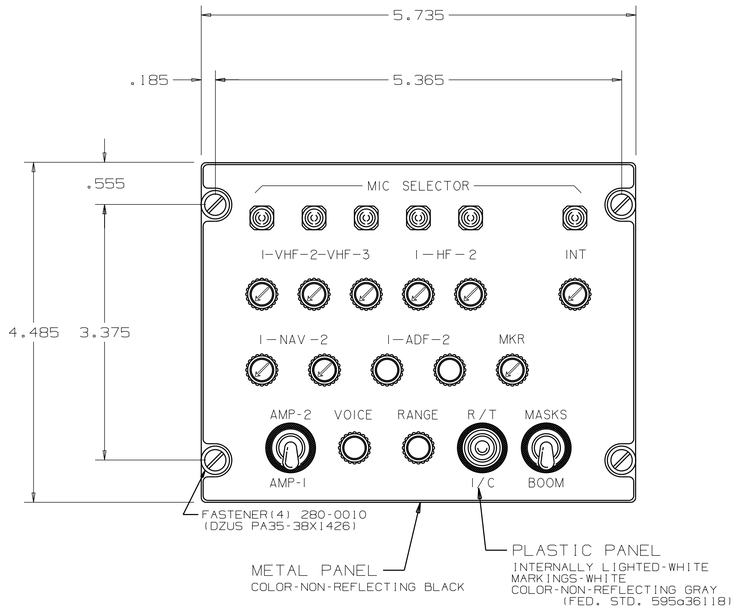

FRONT VIEW
FULL SCALE

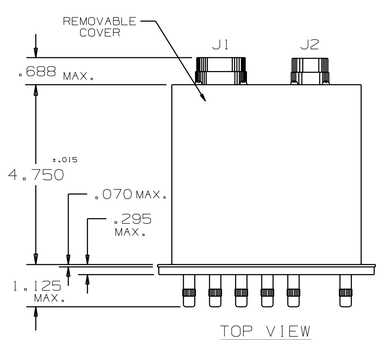

TOP VIEW
1/2 SCALE

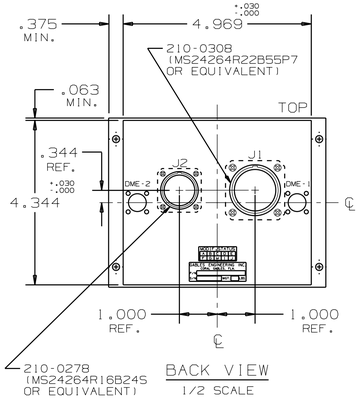

BACK VIEW
1/2 SCALE

NOTES:

1. ALL PANEL LAMPS ARE 5V,60MA,CLEAR.
2. ALL COMPONENTS ARE VIEWED FROM KNOB (FRONT) END.
3. ALL AUDIO INPUTS ARE ISOLATED FROM REMAINDER OF CABLE.
4. ALL SHIELDS ARE GROUNDED AT ONE END.
5. ALL AUDIO SWITCHES, EXCEPT ADF-1/2, ARE PUSH ON/PUSH OFF/ TURN VOLUME.
6. ALL PUSH BUTTON TIPS ARE CLEAR AND LIGHT WHITE WHEN PUSHED.
7. MIC SELECTOR PUSH BUTTONS ARE INTERLOCKED AND BLOCKED OUT TO PREVENT DUAL OPERATION.
8. AMP-1/2 AND MASKS/BOOM TOGGLE SWITCHES ARE MAINTAINED IN DIRECTION THROWN.
9. R/T-1/C TOGGLE SWITCH MAKES CONTACT ON SIDE OPPOSITE TO POSITION OF BAT HANDLE.
10. R/T-1/C TOGGLE SWITCH IS MOMENTARY IN R/T AND I/C POSITIONS AND MAINTAINED IN CENTER (OFF) POSITION.
11. "BOTH" FUNCTION FOR NAV AND ADF IS OBTAINED WHEN VOICE AND RANGE PUSH BUTTONS ARE EITHER IN THE "OUT" (UNSELECTED) POSITION OR BOTH IN THE PUSHED IN (SELECTED) POSITION.
12. A LIGHT RING, .035 WIDE, IS ENGRAVED AROUND EACH TOGGLE SWITCH.

K1,2 PIN VIEW

PANEL LIGHTS (19)

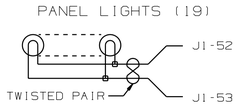

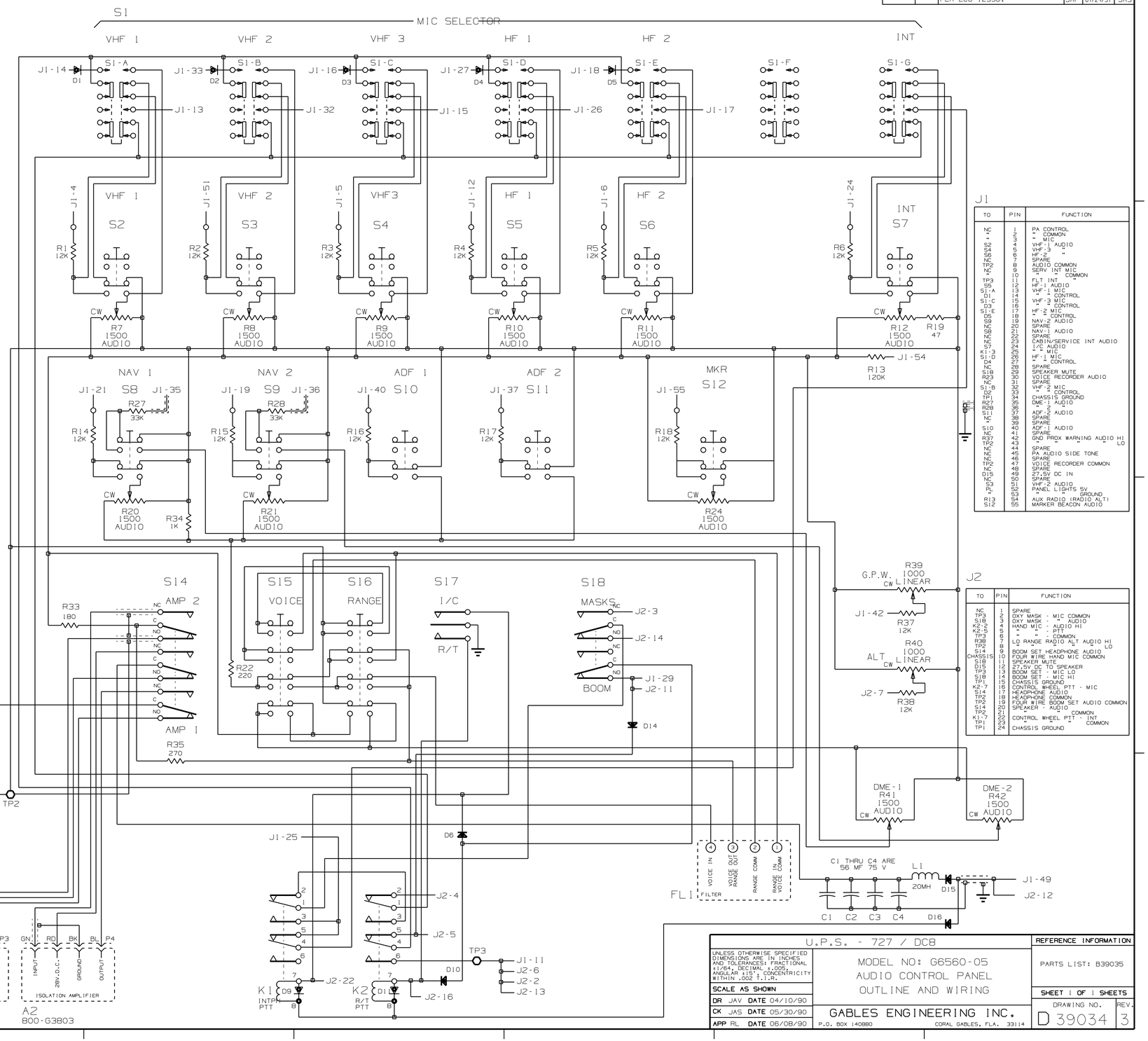

J1

TO	PIN	FUNCTION
NC	1	PA CONTROL
"	2	" COMMON
"	3	" MIC
S2	4	VHF-1 AUDIO
S4	5	VHF-3 "
S6	6	HF-2 "
NC	7	SPARE
TP2	8	AUDIO COMMON
NC	9	SERV INT MIC
"	10	" " COMMON
TP3	11	FLT INT "
S5	12	HF-1 AUDIO
S1-A	13	VHF-1 MIC
D1	14	" " CONTROL
S1-C	15	VHF-3 MIC
D3	16	" " CONTROL
S1-E	17	HF-2 MIC
D5	18	" " CONTROL
S9	19	NAV-2 AUDIO
NC	20	SPARE
S8	21	NAV-1 AUDIO
NC	22	SPARE
NC	23	CABIN/SERVICE INT AUDIO
S7	24	I/C AUDIO
K1-3	25	" " MIC
S1-D	26	HF-1 MIC
D4	27	" " CONTROL
NC	28	SPARE
S18	29	SPEAKER MUTE
R23	30	VOICE RECORDER AUDIO
NC	31	SPARE
S1-B	32	VHF-2 MIC
D2	33	" " CONTROL
TP1	34	CHASSIS GROUND
R27	35	DME-1 AUDIO
R28	36	" -2 "
S11	37	ADF-2 AUDIO
NC	38	SPARE
	39	SPARE
S10	40	ADF-1 AUDIO
NC	41	SPARE
R37	42	GND PROX WARNING AUDIO HI
TP2	43	" " " LO
NC	44	SPARE
NC	45	PA AUDIO SIDE TONE
NC	46	SPARE
TP2	47	VOICE RECORDER COMMON
NC	48	SPARE
D15	49	27.5V DC IN
NC	50	SPARE
S3	51	VHF-2 AUDIO
PL	52	PANEL LIGHTS 5V
"	53	" " GROUND
R13	54	AUX RADIO (RADIO ALT)
S12	55	MARKER BEACON AUDIO

J2

TO	PIN	FUNCTION
NC	1	SPARE
TP3	2	OXY MASK - MIC COMMON
S18	3	OXY MASK - " AUDIO
K2-2	4	HAND MIC - AUDIO HI
K2-5	5	" " - PTT
TP3	6	" " - COMMON
R38	7	LO RANGE RADIO ALT AUDIO HI
TP2	8	" " " " LO
S14	9	BOOM SET HEADPHONE AUDIO
CHASSIS	10	FOUR WIRE HAND MIC COMMON
S18	11	SPEAKER MUTE
D15	12	27.5V DC TO SPEAKER
TP3	13	BOOM SET - MIC LO
S18	14	BOOM SET - MIC HI
TP1	15	CHASSIS GROUND
K2-7	16	CONTROL WHEEL PTT - MIC
S14	17	HEADPHONE AUDIO
TP2	18	HEADPHONE COMMON
TP2	19	FOUR WIRE BOOM SET AUDIO COMMON
S14	20	SPEAKER - AUDIO
TP2	21	" " COMMON
K1-7	22	CONTROL WHEEL PTT - INT
TP1	23	" " " COMMON
TP1	24	CHASSIS GROUND

U.P.S. - 727 / DC8

UNLESS OTHERWISE SPECIFIED DIMENSIONS ARE IN INCHES AND TOLERANCES: FRACTIONAL ±1/64, DECIMAL ±.005, ANGULAR ±15', CONCENTRICITY WITHIN .002 T.I.R.

SCALE AS SHOWN

DR JAV DATE 04/10/90
CK JAS DATE 05/30/90
APP RL DATE 06/08/90

MODEL NO: G6560-05
AUDIO CONTROL PANEL
OUTLINE AND WIRING

GABLES ENGINEERING INC.
P.O. BOX 140880 CORAL GABLES, FLA. 33114

REFERENCE INFORMATION
PARTS LIST: B39035
SHEET 1 OF 1 SHEETS
DRAWING NO. D 39034 REV. 3