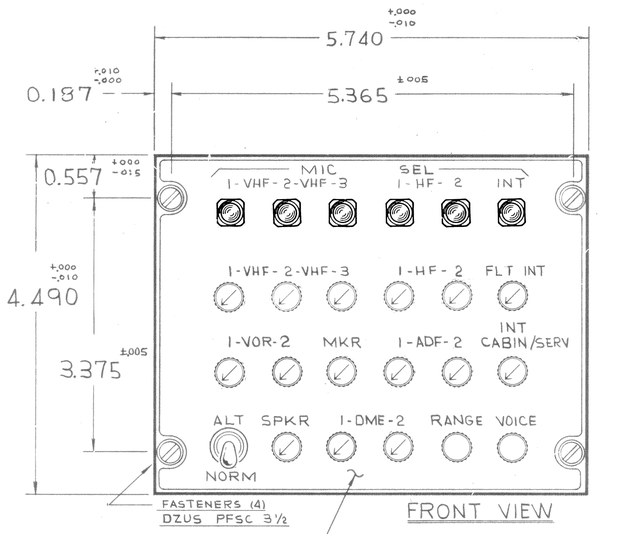

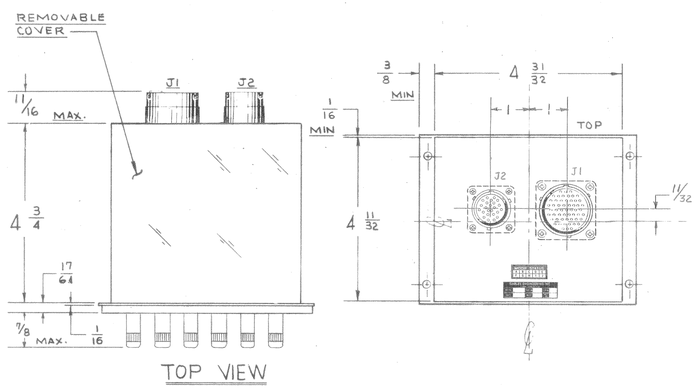

NOTES ~

1. ~ ALL PANEL LAMPS ARE ~~GE 683~~ 5V 60MA CLEAR.
2. ~ ALL MIC SELECTOR BUTTONS ARE CLEAR.
3. ~ VHF, HF, VOR, ADF, DME, MKR, INT, AND SPKR AUDIO LISTEN SWITCHES ARE PUSH-ON / PUSH OFF / TURN VOL.
4. ~ "BOTH" FUNCTION FOR "ADF" AND "VOR" IS OBTAINED WHEN BOTH SWITCHES (RANGE AND VOICE) ARE EITHER DEPRESSED OR BOTH NOT DEPRESSED.
5. ~ ALL AUDIO INPUTS ARE ISOLATED FROM REMAINDER OF CABLE.
6. ~ "C" AND "NO" MAKE WITH S18 IN "NORM" POSITION.
7. ~ ~~"+" INDICATES PANEL LAMP LOCATION.~~
8. ~ ALL COMPONENTS VIEWED FROM KNOB END.
9. ~ ALL SHIELDS TO BE GROUNDED TO CHASSIS AT ONE END.
10. ~ ALL ISOLATION RESISTORS ARE ¼ WATT.
11. ~ MIC SELECTOR PUSH BUTTONS ARE INTERLOCKED TO PREVENT DUAL OPERATION.
12. ~ ALL KNOBS ARE BLACK.

PANEL LIGHTS (15)

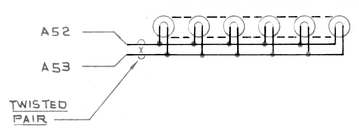

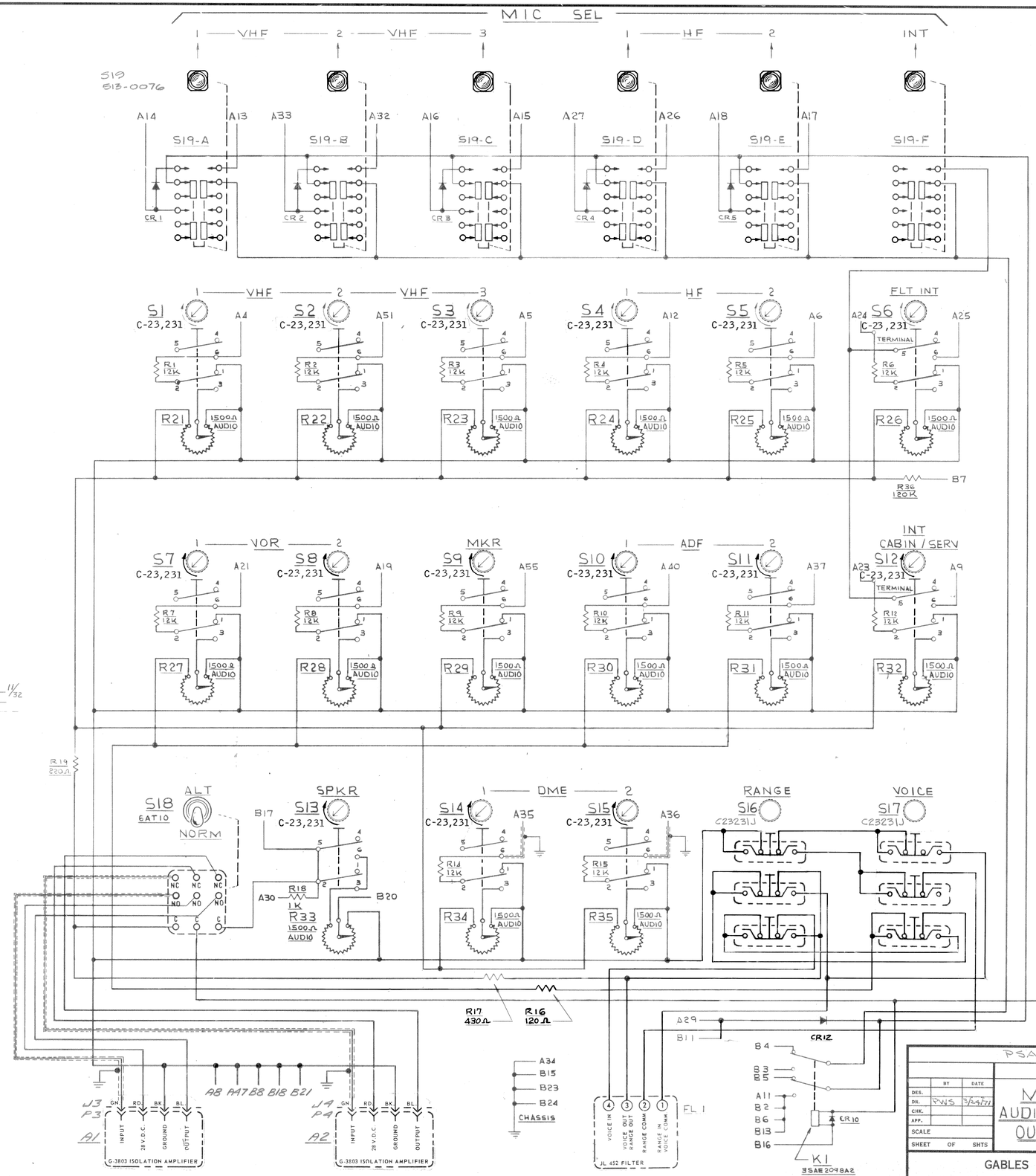

MOD STATUS	LET.	REVISION RECORD CHANGE	BY	DATE	APP.
A	-1	ALL AUDIO SWITCHES WERE A19697, A1 & A2 WERE Q803.	WS	11-15-72	
	2	S1-S15 WERE A-19447-1	BFS	8-22-78	
	3	S16,17 PART NO. WAS A-16167	OP	5-16-84	
	4	ADDED MOD STATUS PLATE (BACK VIEW), DELETED NOTE 7, REVISED MODEL NO. PER D.A.C. REQUEST	RRS	2-1-88	
B	5	ADDED S19 P/N (WAS OAK SW) REVISED ACCORDINGLY, CONNECTORS WERE MOUNTED OUTSIDE, PANEL LIGHTS WERE Q, CHANGED MOD STATUS TO B, PROD. EFF. S/N 334 & ABOVE, PER ECO 7650.	LAA	9-15-88	
C	6	C1-C4 WERE 60MF, 50V CHANGED TO MOD STATUS C. ECO 12609.	AH	6-2-97	

J1 (A) ZZB-AC-1722-55P7

TO	P/N NO	FUNCTION
NC	1	PA CONTROL
	2	COMMON
	3	MIC
S1	4	VHF-1 AUDIO
S3	5	VHF-3
S2	6	HF-2
NC	7	SPARE
COMMON	8	AUDIO COMMON
S12	9	CABIN/SERVICE INT MIC
NC	10	" " " COM
K1	11	INTERPHONE COM/MIC LO
S4	12	HF-1 AUDIO
S19-A	13	VHF-1 MIC
"	14	" " CONTROL/MIC LO
C	15	VHF-3 MIC
"	16	" " CONTROL/MIC LO
E	17	HF-2 MIC
"	18	" " CONTROL/MIC LO
S8	19	VOR-2 BOTH
NC	20	" " RANGE
S7	21	VOR-1 BOTH
NC	22	" " RANGE
S12	23	CABIN/SERVICE INT AUDIO
S6	24	INTERPHONE AUDIO
"	25	" MIC
S19-D	26	HF-1 MIC
"	27	" " CONTROL/MIC LO
NC	28	SPARE
CR12	29	SPKR CROSS-MUTE
R19	30	VOICE RECORDER AUDIO HI
NC	31	SPARE
S19-B	32	VHF-2 MIC
"	33	" " CONTROL/MIC LO
CHASSIS	34	CHASSIS GROUND
S14	35	DME-1 AUDIO
S15	36	DME-2 AUDIO
S11	37	ADF-2 BOTH
NC	38	" " RANGE
"	39	SPARE
S10	40	ADF-1 BOTH
NC	41	" " RANGE
"	42	SPARE
	43	
	44	
NC	45	PA AUDIO SIDETONE
"	46	SPARE
COMMON	47	VOICE RECORDER AUDIO LO
NC	48	SPARE
L1	49	27.5V DC INPUT
NC	50	SPARE
S2	51	VHF-2 AUDIO
PL	52	PANEL LIGHTS 5VAC
"	53	" " GND
NC	54	ATC
S9	55	MARKER BEACON

J2 (B) ZZB-AC-1716-24S

TO	P/N NO	FUNCTION
NC	1	OXY MASK MIC CONTROL
K1	2	MIC LO
	3	MIC HI
	4	HAND MIC MIC HI
	5	PTT
	6	MIC LO
R21	7	LO RANGE RADIO ALTIM AUDIO HI
COMMON	8	" " " " LO
NC	9	BOOM MIC SPARE
"	10	27.5 VDC OUT (RESERVED)
CR12	11	COCKPIT SPEAKER MUTE
L1	12	" " 27.5VDC
K1	13	BOOM MIC MIC LO
NC	14	" " MIC HI
CHASSIS	15	SHIELD GROUND
K1	16	CONTROL WHEEL PTT R/T
S13	17	HEADPHONE AUDIO HI
COMMON	18	" AUDIO LO
NC	19	CONT-MASK MIC TO PA (RES)
R33	20	COCKPIT SPEAKER AUDIO HI
COMMON	21	" " AUDIO LO
NC	22	CONTROL WHEEL PTT INT
CHASSIS	23	" " " RETURN
"	24	COCKPIT SPEAKER GROUND

PSA L-1011

	BY	DATE
DES.		
DR.	PWS	3/29/77
CHK.		
APP.		
SCALE		
SHEET OF SHTS		

MODEL G3737
AUDIO CONTROL PANEL
OUTLINE AND WIRING

REFERENCE INFORMATION
PARTS LIST C18790
DWG LIST A18780

GABLES ENGINEERING INC.
PO BOX 880 CORAL GABLES, FLA.

DRAWING NO. D-18785 REV. 6

K+E ALBANENE® TRACING PAPER 70860 T-SQUARE, MIAMI