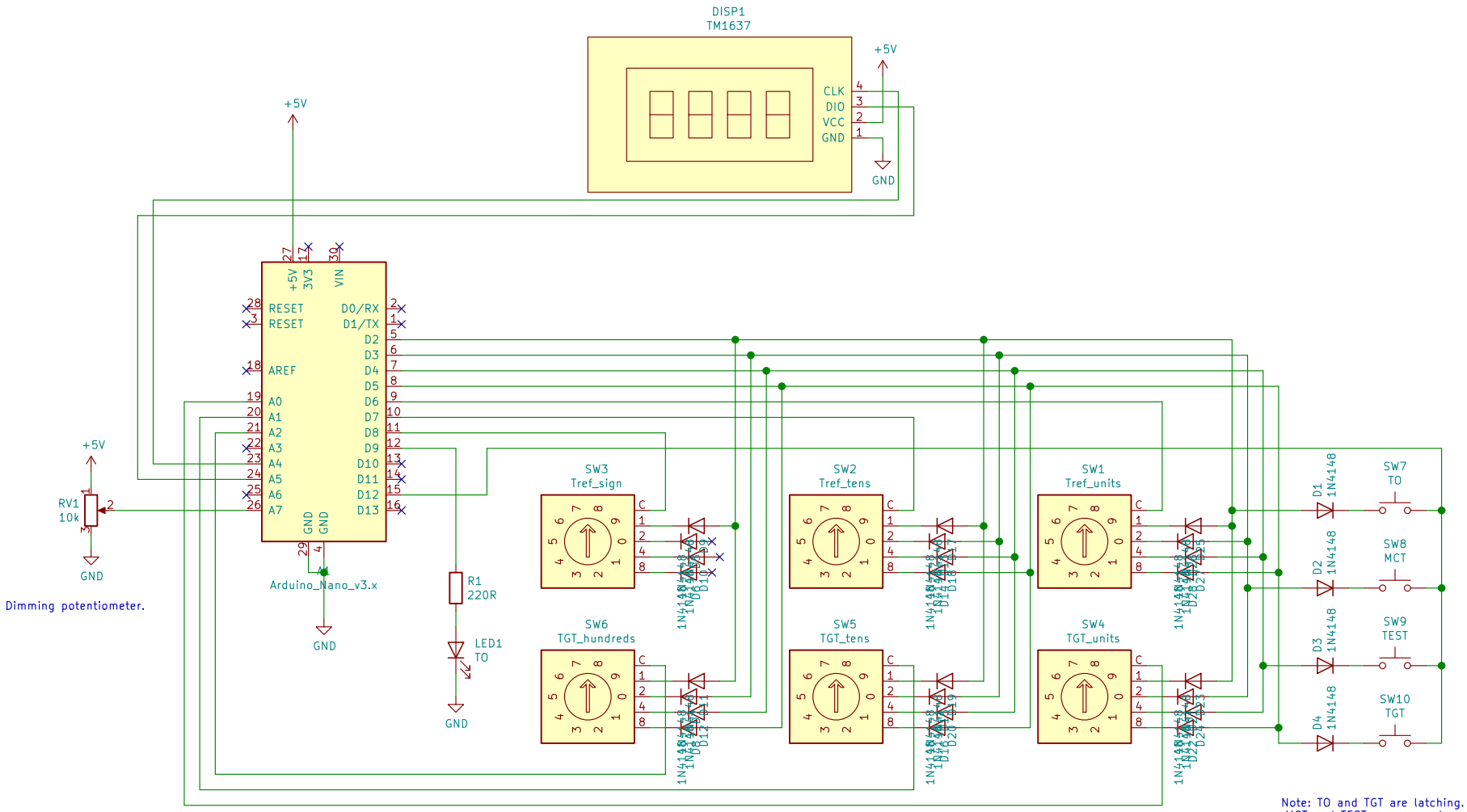

All rights reserved
Copyright November 2020 A M Errington

Sheet: /
File: bae146_tms_schematic.sch

Title: BAe146 TMS simulator

Size: A4	Date: 2020-11-12	**Rev:**
KiCad E.D.A. kicad (5.1.2)-1		Id: 1/1