Rotation of control wheel is +65 deg -65deg @37-50NM
Column angle is 9 deg fwd and 11 deg back @ 130-420NM.
Rest position is 5 deg fwd.

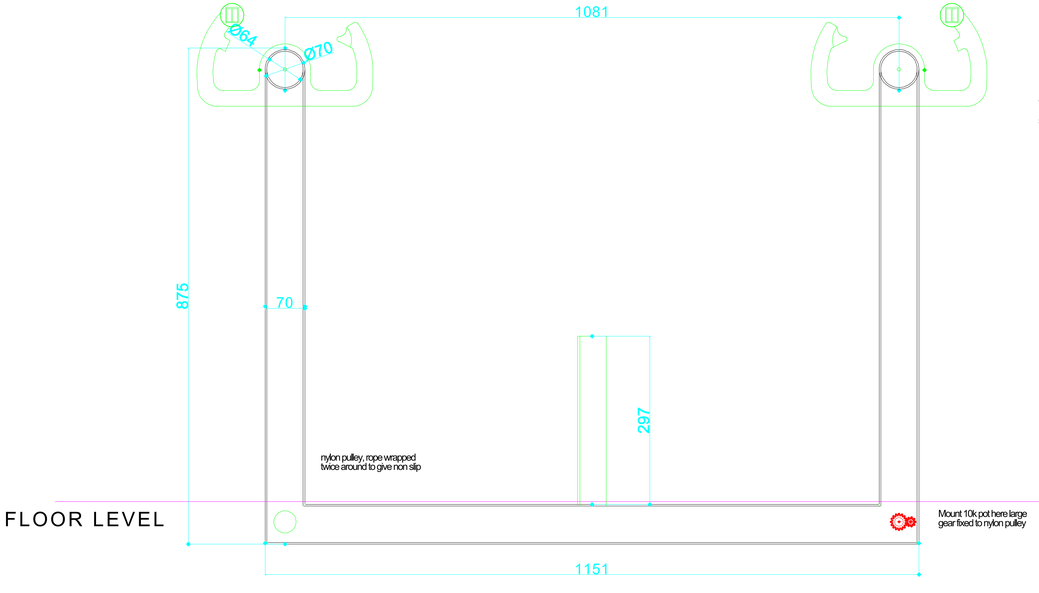

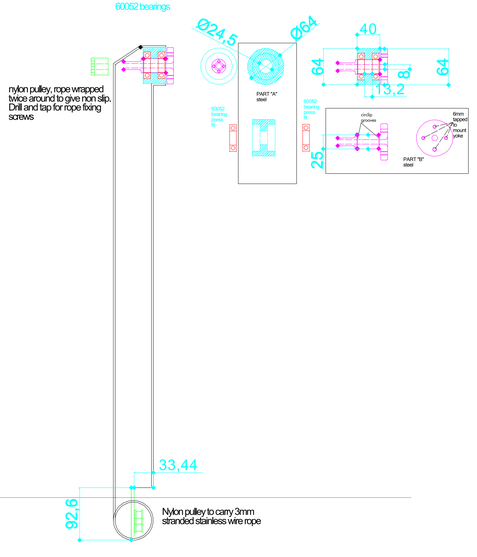

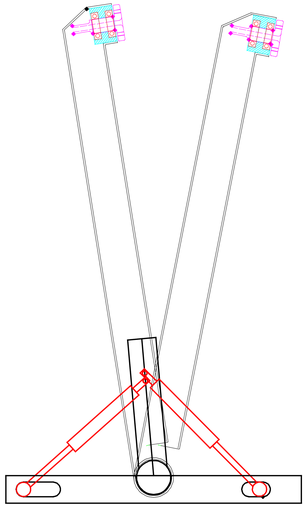

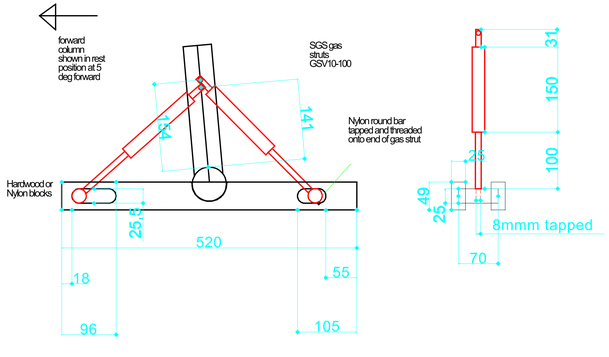

Column is welded round steel tube 64mm I.Dia with cutouts to allow mounting of nylon pulleys and pot. Angle iron at center to allow fixing of gas struts. This is hidden under pedestal of cockpit. Small flat plates welded in base of tubes to enable pulleys to be mounted in centreline. 3mm stainless steel wire rope threaded around pulleys (double wrap around pulleys). Wire rope clamped by screws to pulleys at Yoke head. Slot cut in base tube to allow fitting of wire rope tensioner and fitting of return to centre springs.